DATASHEET COMING SOON

AGRICULTURE FOOD INDUSTRIAL MINING MUNICIPAL OIL & GAS REFRIGERATION RENTAL

CORNELL
EFFICIENT BY DESIGN

DATA SHEET
101222T

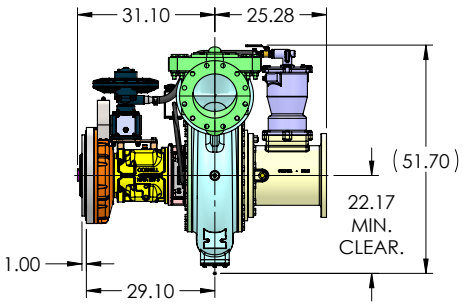

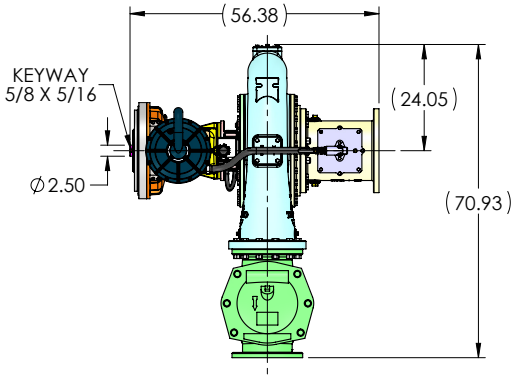

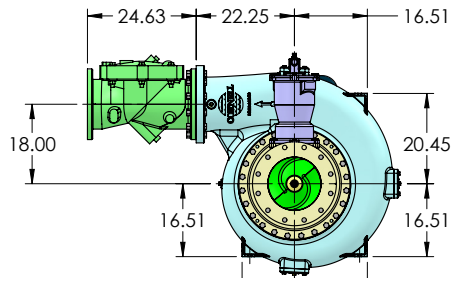

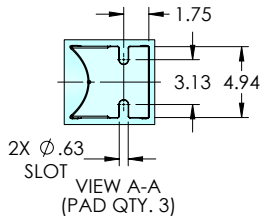

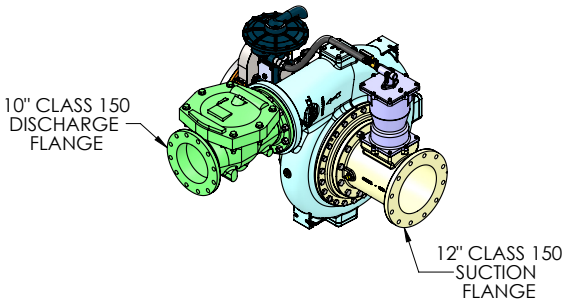

Performances shown are for S.G. 1.0 60°F water, frame mounted configuration. Other mounting styles or S.G. may require curve adjustments.	Speed	Impeller Dia.	Style	Volute	Solids Dia.	N_S	Suction	Discharge	No. Vanes
	VARIOUS	21.95"	ENCLOSED	DOUBLE	4"	2110	12"	10"	2

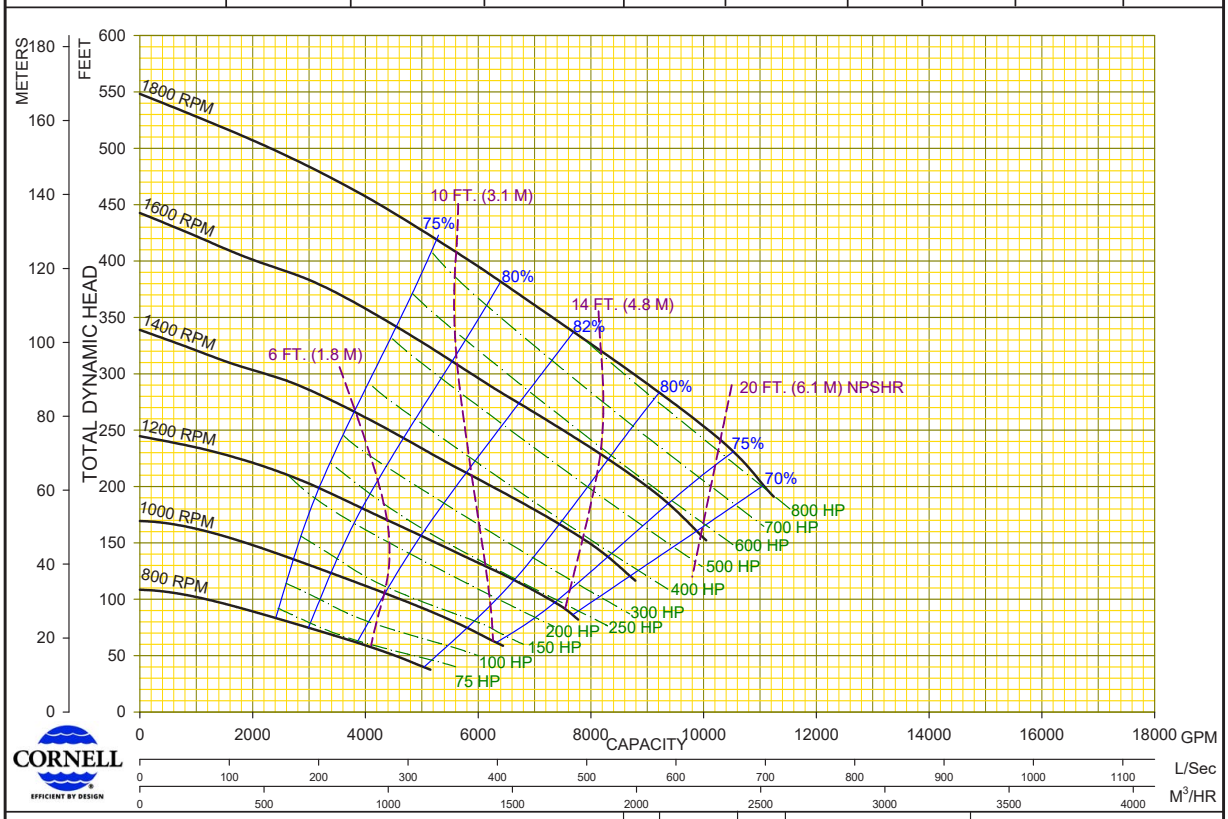

Cornell Pump Company • Clackamas, Oregon					
00	09/23/21	FM/JW	MODEL : 101222T	CURVE NO:	101222TVA
01	03/06/24	KA/JW	TYPE : SOLIDS HANDLING		